DO NOT SCALE IF IN ANY DOUBT–ASK

PAGE No/REFERENCE

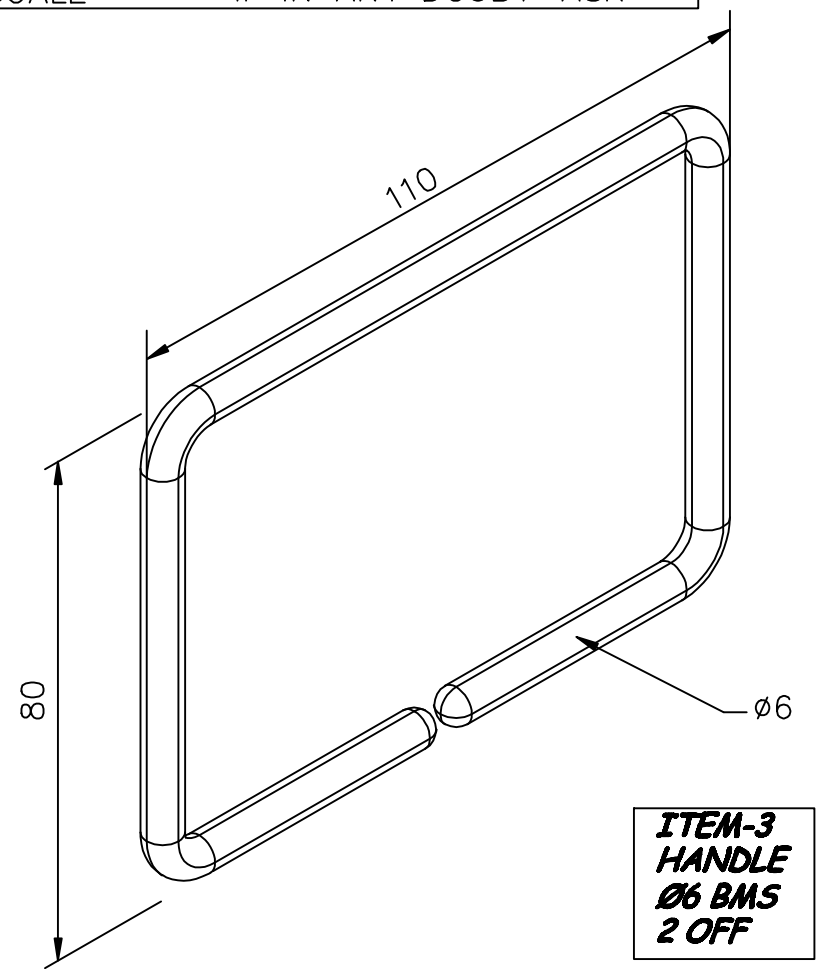

ITEM-3
HANDLE
Ø6 BMS
2 OFF

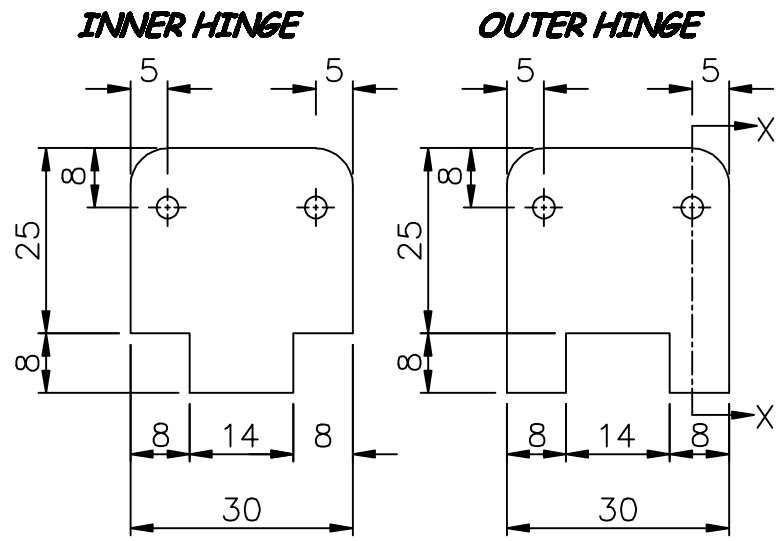

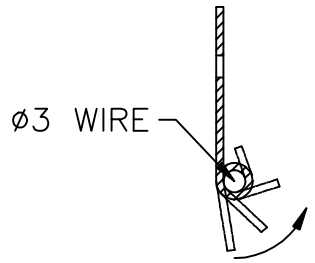

SECTION ON X-X
SHOWING HINGE
PIN DEVELOPMENT

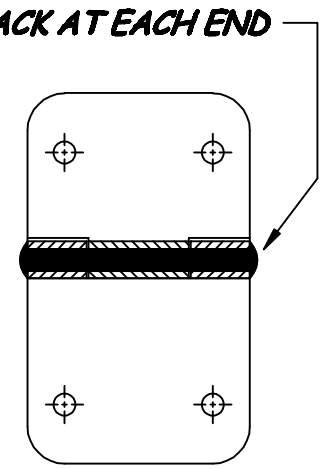

ASSEMBLY

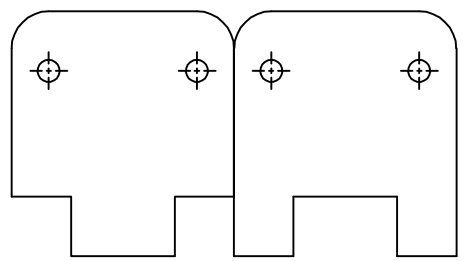

MANUFACTURE AS A PAIR
THEN CUT FORM ENDS

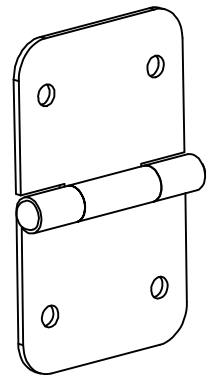

ITEM-5
HINGE ASSEMBLY
20 SWG BMS
4 OFF

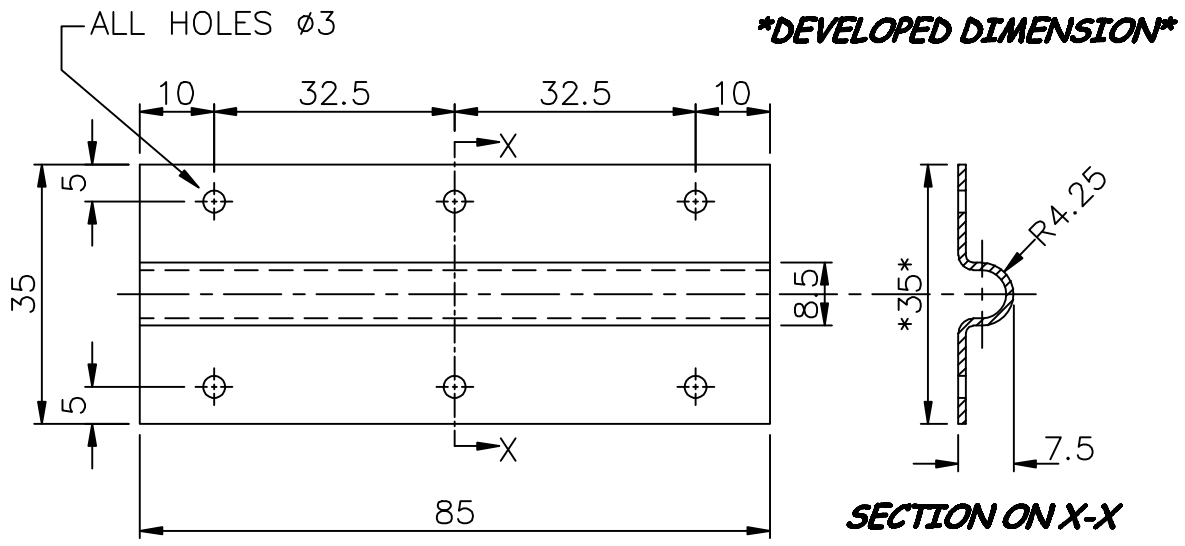

DEVELOPED DIMENSION

SECTION ON X-X

ITEM 4-HANDLE STRAP
20 SWG BMS
CUT PIECE 85x50
PRESS TO SHAPE
2 OFF

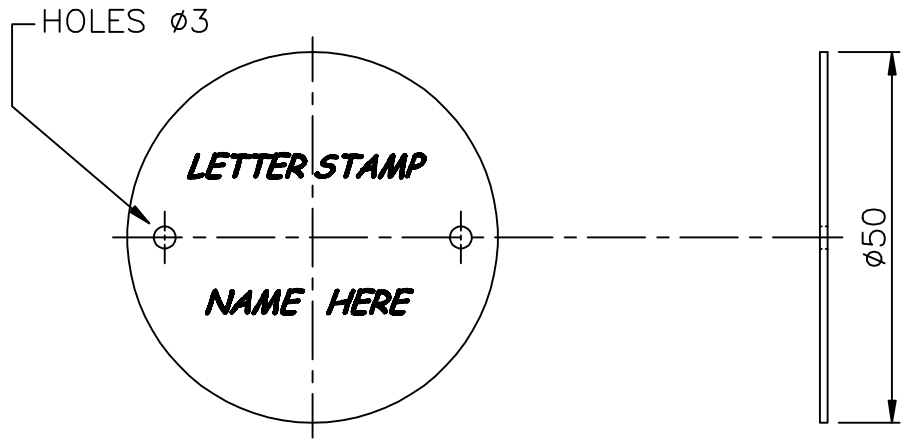

ITEM-6
NAME PLATE
20 SWG BMS
1 OFF

TTE Training Tomorrow's Engineers
www.tteltd.co.uk

ALT No	GRID	DATE	ALTERATION
1		24/6/10	Updated border inserted

ALL DIMENSIONS IN METRIC

REMOVE ALL SHARP EDGES & BURRS

PROJECTION

REPORT ANY ERRORS

NAME	PARTS
PART Nº	PEO–L2/FA7–3
MAT'L	SEE ITEM
FINISH	NATURAL
Nº OFF	SEE ITEM

TOLERANCES

UNLESS OTHERWISE STATED
DIMENSIONS TO ONE DECIMAL PLACE (0.0) ± 0.10mm
DIMENSIONS TO TWO DECIMAL PLACES (0.00) ± 0.025mm
ALL OTHER DIMENSIONS ± 0.5mm UNLESS STATED
ANGULAR DIMENSIONS ± 0.5°

DESCRIPTION

TOOL BOX
Producing Sheet Metal Components and Assemblies

SCALE	1:1	DATE	2–10–07		
DRAWN	E.CODY	CHKD		REV	2
DWG Nº	FA7–3	SHEET	3of5		A3