A	B	C	D
DO NOT SCALE	IF IN ANY DOUBT–ASK		PAGE No/REFERENCE

TOOL TRAY LID

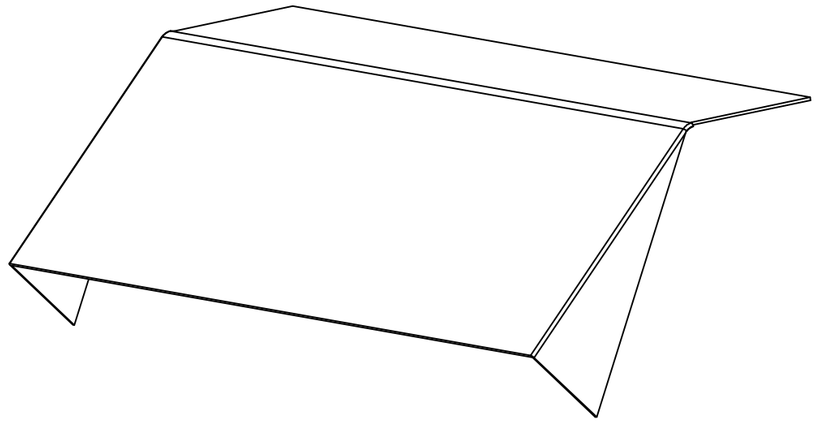

DEVELOPMENT LAYOUT

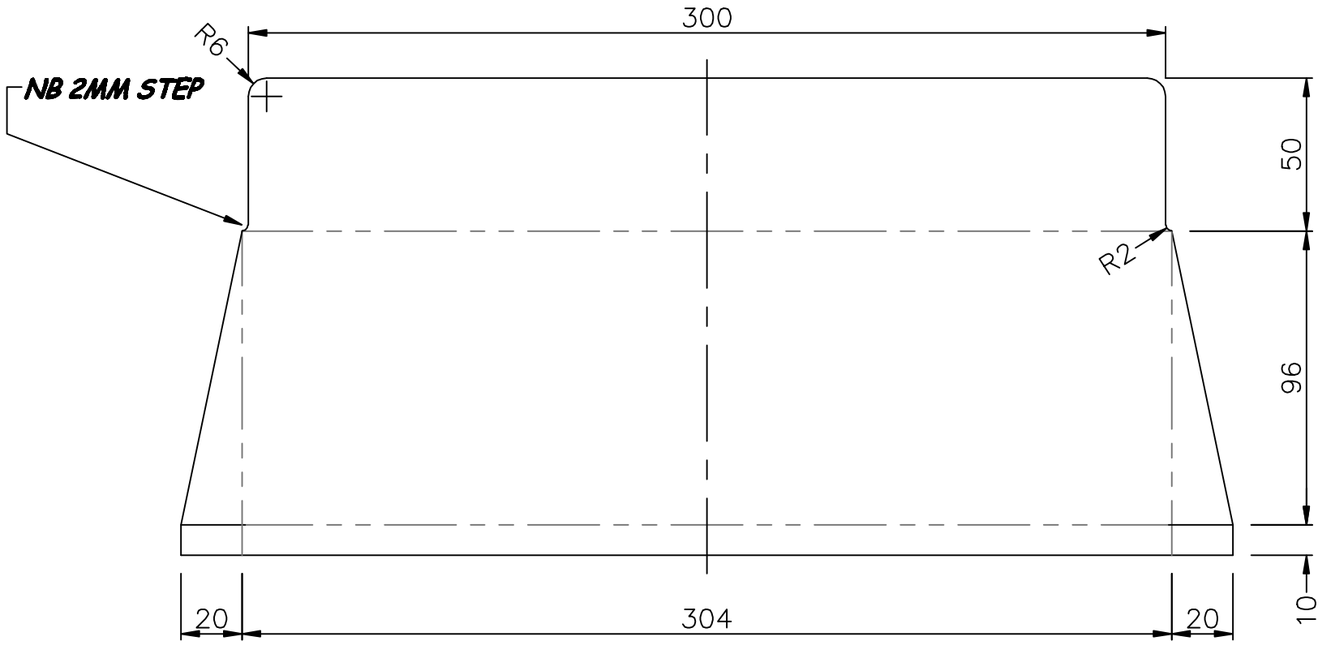

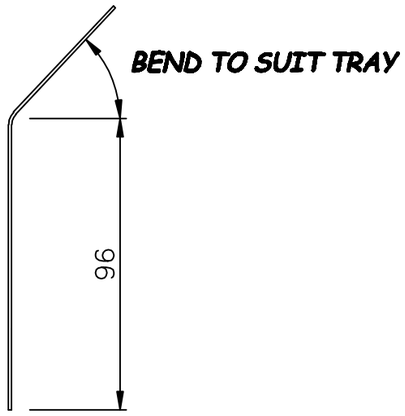

TOLERANCE ± 1mm

FOLDED EDGES

ALT No	GRID	DATE	ALTERATION
1		24/6/10	Updated border inserted
2		8/5/15	Tolerance changed to +/–1 from 3

ALL DIMENSIONS IN METRIC

REMOVE ALL SHARP EDGES & BURRS

PROJECTION

REPORT ANY ERRORS

NAME	TOOL TRAY LID
PART Nº	PEO–L2/FA7–4
MAT'L	BMS 20 SWG (1mm)
FINISH	NATURAL
Nº OFF	2 OFF

TOLERANCES

UNLESS OTHERWISE STATED
DIMENSIONS TO ONE DECIMAL PLACE (0.0) ± 0.10mm
DIMENSIONS TO TWO DECIMAL PLACES (0.00) ± 0.025mm
ALL OTHER DIMENSIONS ± 0.5mm UNLESS STATED
ANGULAR DIMENSIONS ± 0.5°

TTE Training Tomorrow's Engineers
www.tteltd.co.uk

DESCRIPTION

TOOL BOX
Producing Sheet Metal Components and Assemblies

SCALE	1:2	DATE	3–10–07		
DRAWN	E.CODY	CHKD		REV	2
DWG Nº	FA7–4	SHEET	4of5		A3