A	B	C	D
DO NOT SCALE	IF IN ANY DOUBT–ASK		

NOTE 1
LEAVE END SQUARE -ANGLE ON ASSEMBLY

NOTE 2
HOLES TRANSFERRED FROM SQUARE IN ASSEMBLY POSITION THEN CSK BOTH EXTERNAL FACES TO SUIT Ø1/8 RIVETS

A	DATUM FACE
	SURFACE FINISH 63 µIN
	FLATNESS 0.002/1
	PERPENDICULAR 0.002/1
	DOWEL HOLES TO H8
	ANGULAR ±1°
	PARALLEL ±0.002/1

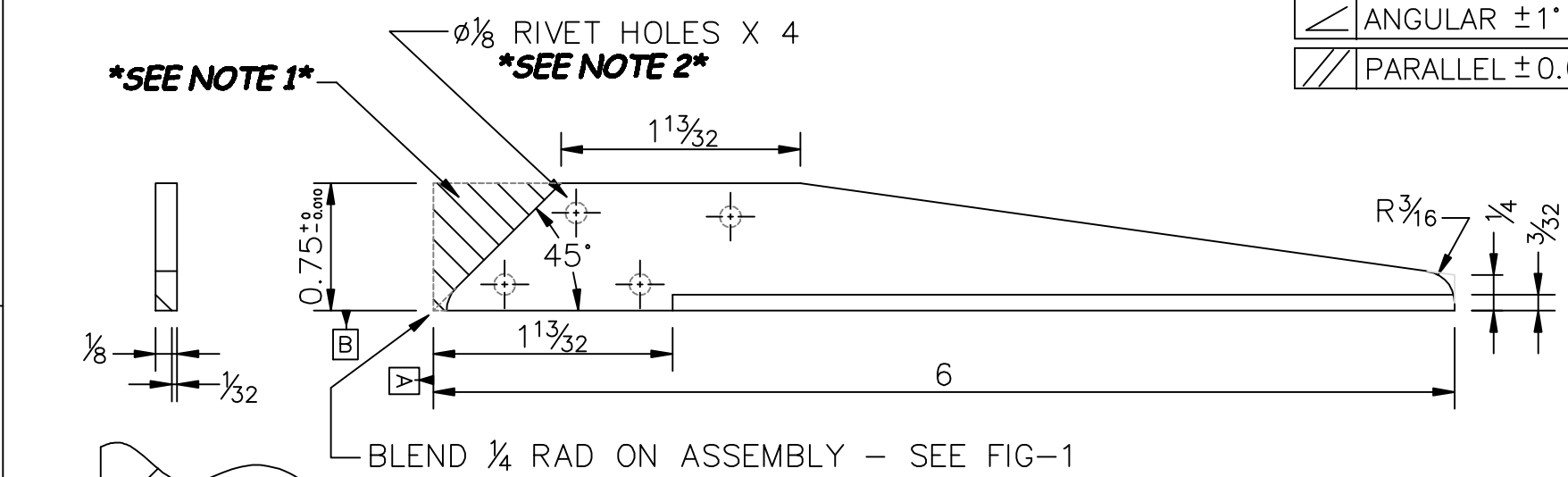

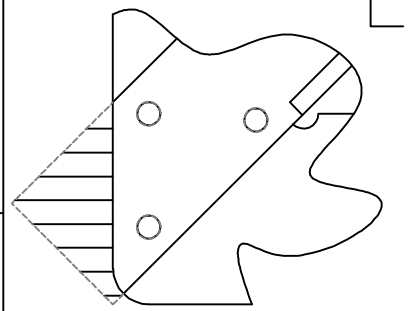

FIG–1

GRID	DATE	ALTERATION
D3	11/12/12	DIMENSION 1/4 ADDED
A1,3	27/10/13	ADDITIONAL DETAIL ADDED
A2	25/11/13	Dimension 0.75 ±0.010 was 3/4

PROJECTION

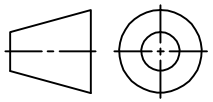

REPORT ANY ERRORS

NAME	CENTRE SQUARE BLADE
PART Nº	
MAT'L	BMS
FINISH	NATURAL
Nº OFF	1 OFF

TOLERANCES

DIMENSIONS ARE IN INCHES

UNLESS OTHERWISE STATED GENERAL TOLERANCE ±1/64"

ANGULAR DIMENSIONS ±1°

TTE Training Tomorrow's Engineers
www.tteltd.co.uk

DESCRIPTION

PHASE 1 MECHANICAL M1
CENTRE SQUARE

DRAWN	E.CODY	DATE	10–5–2011		
SCALE	1 : 1	DWG Nº	TBA	REV	4
CHKD		SHEET	2 of 3		A4