A	B	C	D
DO NOT SCALE	IF IN ANY DOUBT–ASK		

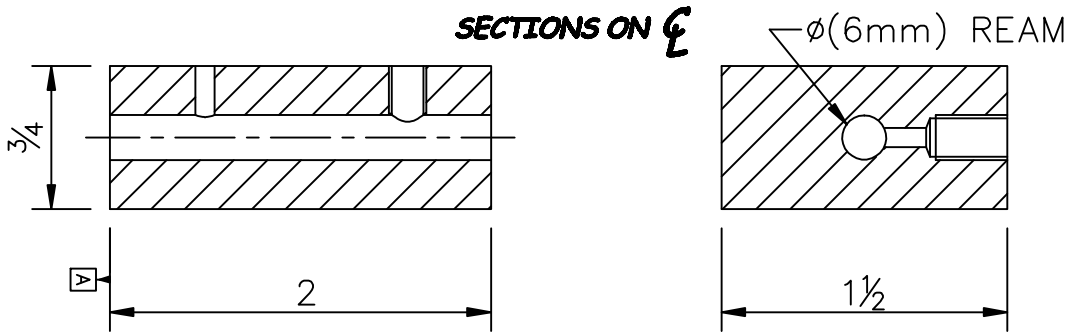

A	DATUM FACE
	SURFACE FINISH63 µIN
	FLATNESS 0.001/1
⊥	PERPENDICULAR 0.001/1
	DOWEL HOLES TO H8
∠	ANGULAR ±1°

THREADS TO MEET BS MEDIUM FIT

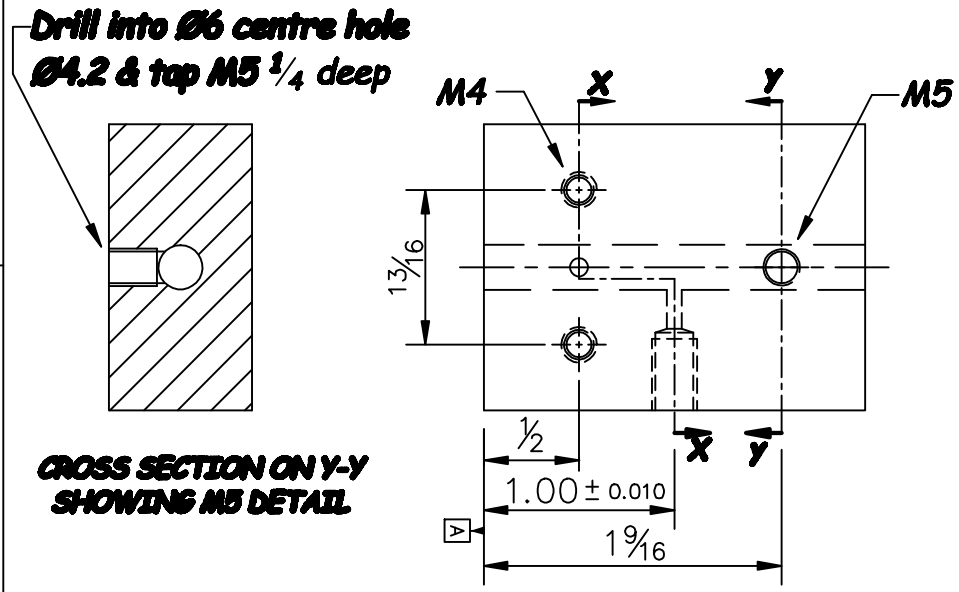

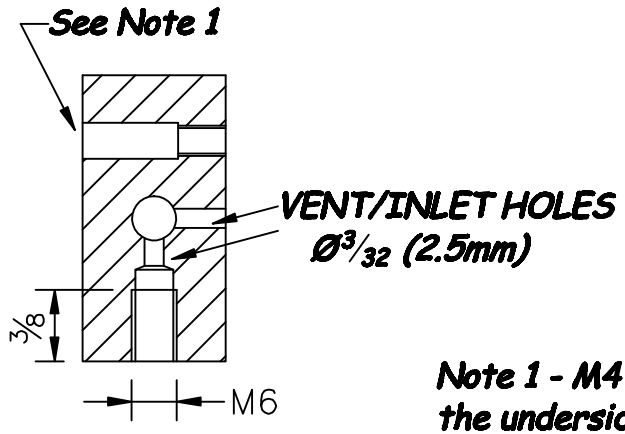

Note 1 - M4 Holes Tapped from the underside via relief hole. Relief hole Ø4.2mm x ½" deep

TTE Training Tomorrow's Engineers
www.tteltd.co.uk

GRID	DATE	ALTERATION
B3	28/8/14	Rear M4 holes replaced with M5

PROJECTION

REPORT ANY ERRORS

NAME	CRANK CASE
PART Nº	1
MAT'L	ALUMINIUM
FINISH	FINE MACHINED
Nº OFF	1 OFF

TOLERANCES

DIMENSIONS ARE IN INCHES

UNLESS OTHERWISE STATED GENERAL TOLERANCE ±1/64"

ANGULAR DIMENSIONS ±1°

DESCRIPTION

PHASE 1 MECHANICAL MA1 BEAM ENGINE

DRAWN	E.CODY	DATE	09–7–2013		
SCALE	1 : 1	DWG Nº	TBA	REV	2
CHKD		SHEET	2 of 6		A4