DO NOT SCALE — IF IN ANY DOUBT—ASK

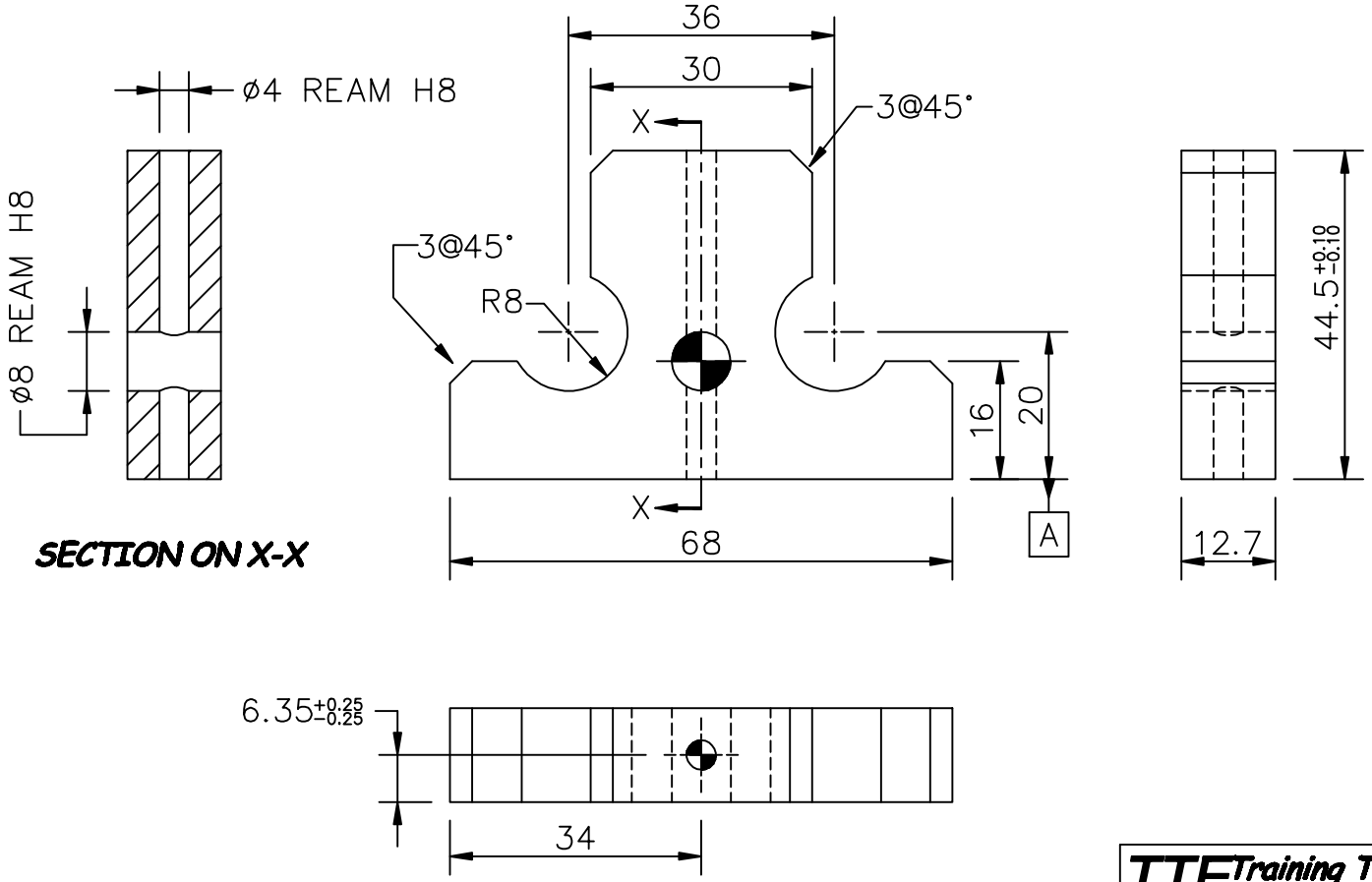

TTE Training Tomorrow's Engineers
www.tteltd.co.uk

GRID	DATE	ALTERATION
C2	21.10.08	44.5 was 41 due to material availability
	30.04.08	Geometrical tolerances removed

PROJECTION

REPORT ANY ERRORS

NAME	DEPTH GAUGE
PART Nº	VQ/AS2.1
MAT'L	ALUMINIUM
FINISH	NATURAL
Nº OFF	1

TOLERANCES

DIMENSIONS ARE IN MILLIMETERS

UNLESS OTHERWISE STATED GENERAL TOLERANCE ± 0.25mm

ANGULAR DIMENSIONS ± 1°

DESCRIPTION

FITTING ASSESSMENT 2
DEPTH GAUGE

DRAWN	E.CODY	DATE	14–9–08		
SCALE	1:1	DWG Nº	VQ/AS2.1	REV	3
CHKD		SHEET	2 Of 3		A4